KB8911,2,5,8DPL
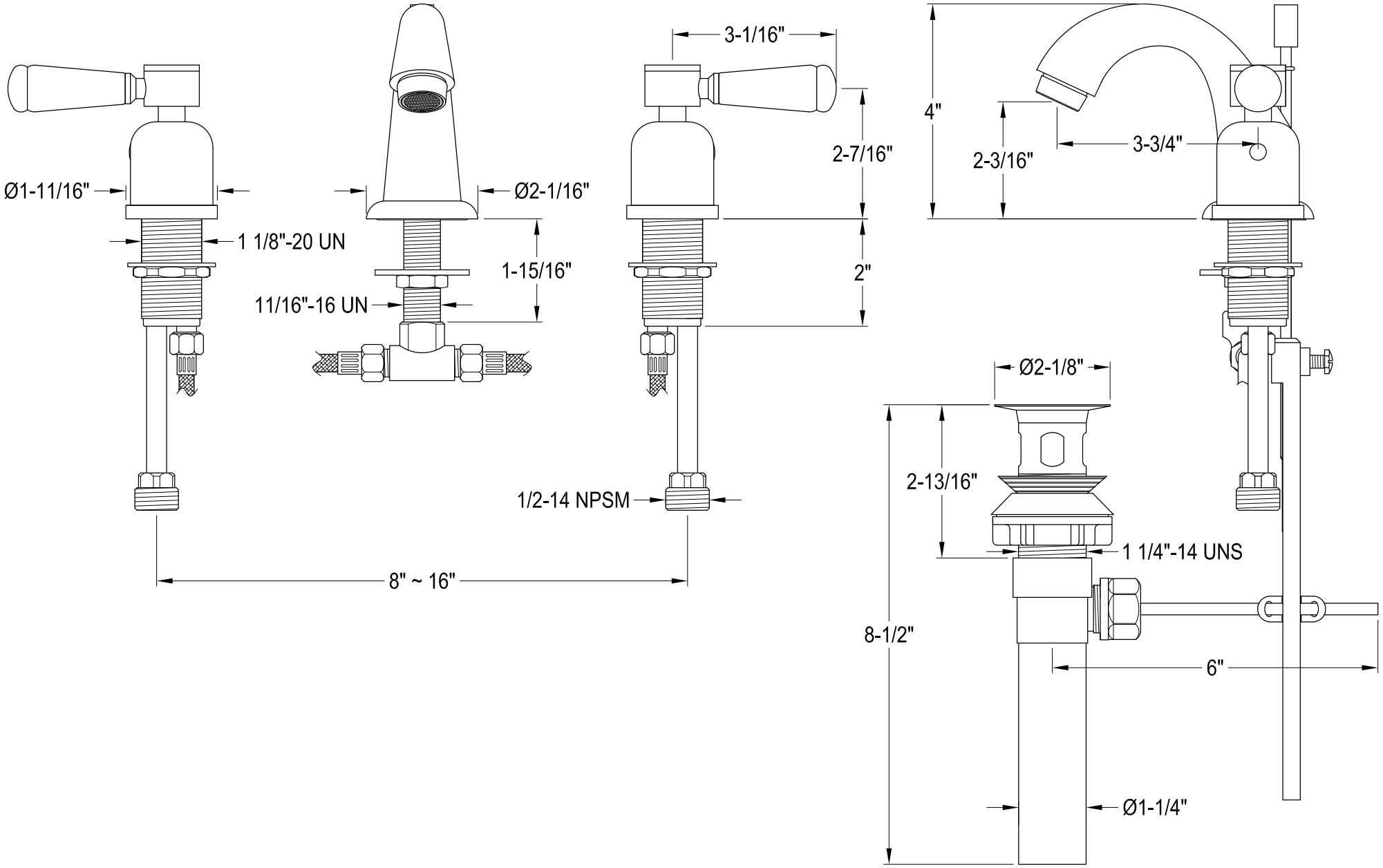
Widespread Lavatory Faucet with Retail Pop-Up